2011 GARAGE/ACCESSORY BLDG PERMIT

2801 89th Street, Sturtevant, Wisconsin 53177

DATE:_____PERMIT NO:_____ TAX KEY NO:_____

OWNER'S NAME: _____PHONE NUMBER:_____

JOB SITE ADDRESS: _____

Permit Plan Review: - $72.60

Permit Fee: - Min. $72.60 or .32/Sq. Ft (over 120 sq ft)

DESCRIPTION: Garage_____ Attached_____ Detached _____ Shed_____

Garage/Shed Size: _____Wide by_____Length Heigth: _____

Type of Material:_____ Roof Material_____Installing Electric? Yes No

- ATTACH DETAILED PLANS WITH ALL PERTINIENT DIMENSIONS
- ATTACH ELECTRICAL PERMIT IF SUPPLYING ELECTRIC TO GARAGE/SHED
- SITE PLAN OR SURVEY PLOT ATTACHED DEPICTING LOCATION OF GARAGE/ SHED
- READ ORDINANCE 17.14 AND 14.20 FOR BUILDING CODE REQUIREMENTS

RE-INSPECTION FEE: $151.80

ALL FEES EFFECTIVE JANUARY - 2009

CALL 262-886-7201 FOR INSPECTIONS

****

CONTRACTORS NAME:_____ SIGNATURE:_____ PHONE #_____

STREET:_____ CITY:_____ STATE:_____ ZIP CODE: _____

APPROVED BY:_____ DATE:_____

BUILDING INSPECTOR

It is hereby agreed between the undersigned (as owner or agent) and the Village of Sturtevant, that for and in consideration of the premises and of the permit for the execution of electrical installation for light, heat or power as above described, to be issued and granted by the inspector of buildings, that the work will be done in accordance with the descriptions set forth in this statement, and it is further agreed to alter or install same in strict compliance with the Ordinances of the Village of Sturtevant, with Wisconsin Statues and Administrative Code, and to obey any and all lawful orders of the Electrical Inspector of the Village of Sturtevant. This permit will grant only two trips with one re-inspection for rough, final, and building service if needed. Additional trips, when needed, will be billed as re-inspection fees per trip. To schedule inspections call (262) 886-7201.

ORDINANCE 2007-12

AN ORDINANCE TO AMEND SECTION 17.14 OF THE CODE OF ORDINANCES FOR THE VILLAGE OF STURTEVANT, RACINE COUNTY, WISCONSIN RELATING TO ACCESSORY BUILDINGS

The Village Board of the Village of Sturtevant, Racine County, Wisconsin, do ordain as follows:

1. That Section 17.14 of the Municipal Code be, and here is, amended to read as follows:

"(1) LIMITATIONS.

(a) Detached Buildings.

1. Accessory buildings which are not part of the main building shall comply with the following requirements:

a. For lots with an area of 12,000 sq. ft. or greater, the owner may construct one building of 900 sq. ft. or less, and a second building of 150 sq. ft. or less. If installing only one building, the owner may construct a building of 1,050 sq. ft. or less.

b. For lots with an area less than 12,000 sq. ft, the owner may construct one building of 600 sq. ft. or less, and a second building of 150 sq. ft. or less. If installing only one building, the owner may construct a building of 750 sq. ft. or less.

c. Notwithstanding the above subsections, accessory buildings shall not occupy more than 50% of the rear yard area.

d. Accessory buildings shall not exceed 15 feet in height, as measured to the top of the roof ridge board from the surrounding ground elevation.

e. Accessory buildings shall not be nearer than 8 feet to any lot line, except that buildings on or with respect to lots existing prior to the adoption of Ordinance 2003-32 (i.e., October 7, 2003) shall not be nearer than 4 feet to any lot line. Where a private garage has an entrance facing an alley, the entrance shall not be located nearer than 10 feet from the nearest alley line.

(b) Attached Buildings.

Where an accessory building is part of the main building, the side and rear yard requirements of the main building shall apply to the accessory building, unless specific applicable zoning district regulations require different distances, in which case the latter shall apply. Private garages on lots with an area less than 12,000 sq. ft. shall not be more than 15 feet in height as measured to the top of the roof ridge board from the surrounding ground elevation, nor shall they be larger than 900 sq. ft.

(2) No person shall install any concrete slab intended for future construction of an accessory building without first submitting to the Building Inspector a drawing showing the exact location of the slab in relation to lot lines and existing buildings. The Building Inspector shall have the authority to require placement of an accessory building in a location that complements the location and use of structures on adjoining properties, and preserves continuity of open space within the lot. If the Building Inspector finds everything in compliance with the Village ordinances, he will then issue a permit for the installation of the slab. There shall be no charge for such permit, but the Building Inspector shall inform any person requesting a slab permit of all other permits and fees required for the actual construction of any accessory building.

(3) EXCEPTIONS.

The above subsections shall have no applicability to parcels of land in excess of 45 acres."

2. This ordinance shall take effect upon adoption and publication as provided by law.

Adopted by the Village Board of the Village of Sturtevant, Racine County, Wisconsin, this 4th day of September, 2007.

VILLAGE OF STURTEVANT

By:_____
Steve Jansen, President

Attest: _____
Mary Hanstad, Clerk/Deputy Treasurer

14.20 GENERAL REQUIREMENTS.

(1) DEFINITIONS.

(a) An *attached private garage* shall mean a private garage attached directly to the principal building, or attached by means of an enclosed or open breezeway, porch, terrace or vestibule, or a private garage so constructed as to form an integral part of the principal building.

(b) A *detached private garage* shall mean a private garage entirely separated from the principal building.

(c) *Accessory buildings* shall conform to all requirements of this section.

(2) LOCATIONS.

Detached garages shall be governed by applica~le setback provisions contained in the Village Zoning Code.

(3) AREA.

All private detached garages shall be governed by the applicable area requirements contained in the Village Zoning Code.

(4) FOUNDA TIONS AND FOOTINGS.

Attached private garages shall be provided with the same type footings and foundations as required herein for the principal building. Concrete floors shall be not less than four (4) inches in thickness. Detached private garages may be built with a continuous floating slab of reinforced concrete not less than four (4) inches in thickness. Reinforcement shall be a minimum of number 10 six by six (6" x 6") inch wire mesh. The slab shall be provided with a thickened edge all around, eight (8) inches wide and eight (8) inches below the top of the slab. The thickened edge shall have two (2) #4 horizontal reinforcement bars placed at the center. The lower reinforcement bar shall be set two (2) inches above the bottom of the thickened edge and the upper reinforcement bar shall be set six (6) inches above the bottom of the thickened edge. Exterior wall curbs shall be provided not less than four (4) inches above the finished ground grade adjacent to the garage. Bolts three-eighths (%) inches in diameter with nuts and washers attached, six (6) inches long, shall be embedded three (3) inches in the concrete curb of detached garages, eight (8) feet on centers.

FLOOR SURF ACE. The floor in all private garages shall be of concrete construction and sloped toward the exterior garage door or opening. No openings or pits in the floor shall be permitted, except for drainage.

(5) CONSTRUCTION.

Private garages shall be constructed as follows:

(a) Load bearing foundation walls and partitions shall be constructed as herein regulated except as stated above.

(b) Detached private garages of wood frame construction shall be constructed with the following requirements.

1. Studs may have a maximum spacmg of twenty-four (24) inches on centers.

2. Diagonal comer bracing shall be installed on both walls at each comer. Diagonal comer bracing may be applied on the inside surface of studs.

3. Comer posts may consist of two (2) two by four (2 x 4) inch studs or a single four by four (4 x 4) inch stud.

4. Collar beams at the top plate and collar ties in the upper one4third of the roof shall be installed with a maximum spacing of forty-eight (48) inches on center. Collar beams may be two by six (2 x 6) inch. Collar ties shall be at least two by four (2 x 4) inch for roof slopes less than four (4) inches per foot. A one by six (1 x 6) inch collar tie may be used for roof slopes four (4) inches per foot or greater.

5. Detached garage roofs shall be framed in accordance with the applicable requirements of §Comm 21.28, Wis. Admin. Code.

SAMPLE SITE PLAN

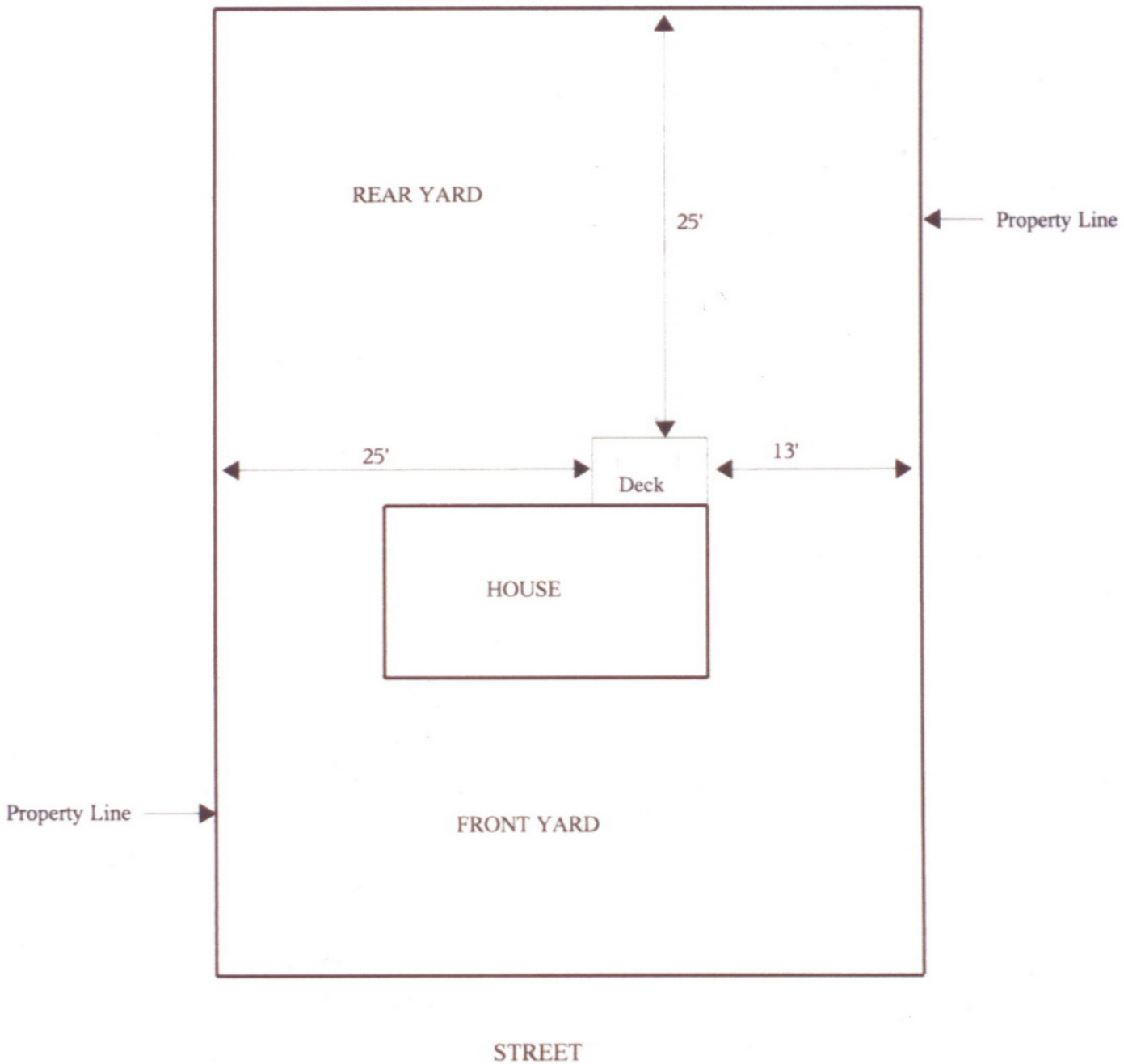

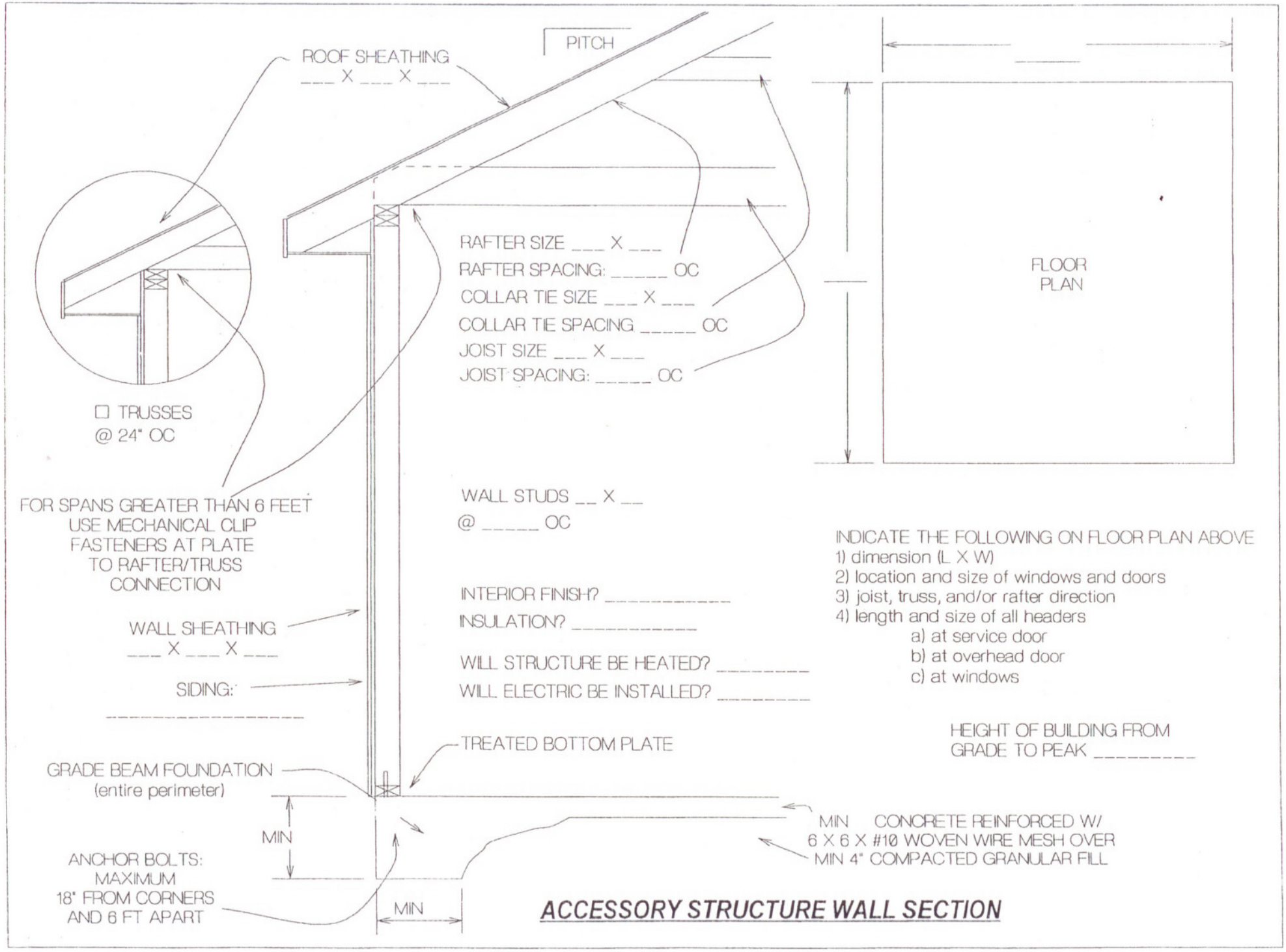

ACCESSORY STRUCTURE WALL SECTION

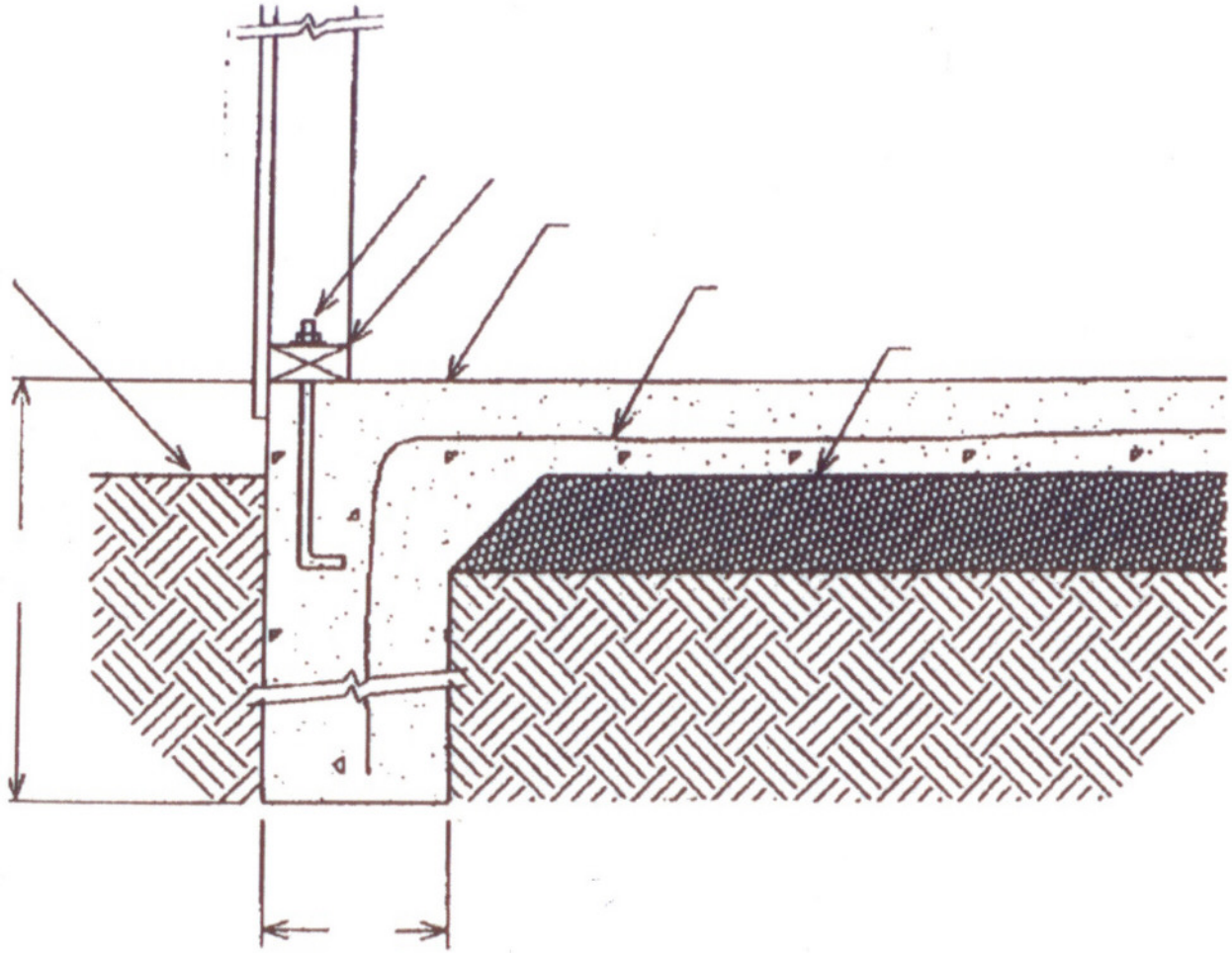
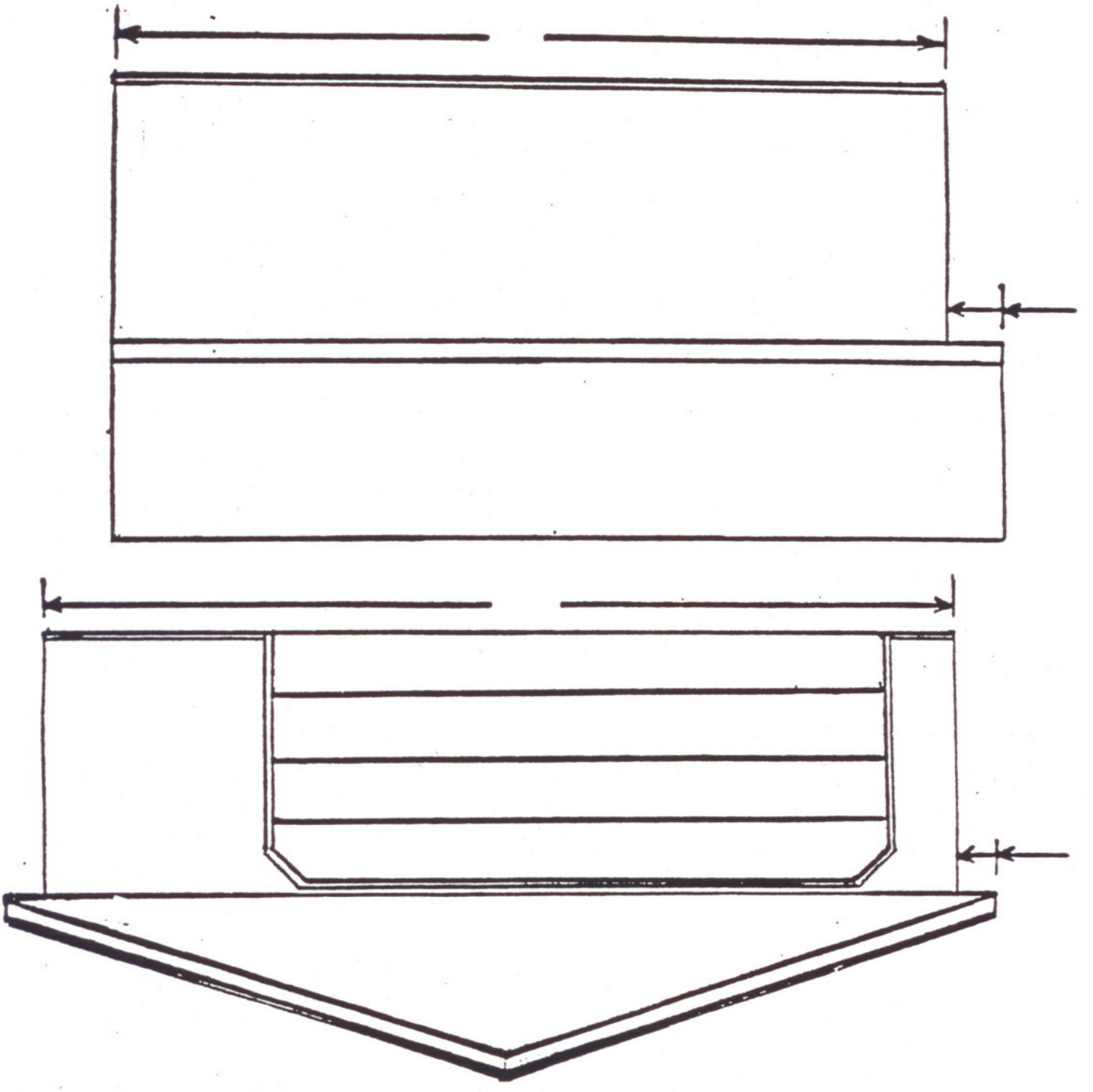
Slab Example